# Prototype system for measuring and heatmapping of high-frequency radio waves

## 1.Introduction

Wireless communication often faces congestion and interference. To evaluate the impact, planning to solve and identify the source of the problem requires a spectrum analyzer. Spectrum analyzers are costly (around 300,000 THB) , impractical for field use, and don't have Heat Mapping on a Real map. A low-cost prototype using a microcontroller, RF detector, and GPS can measure and map RF signal intensity. This system enables

- network coverage analysis
- interference reduction

supports future applications in Smart Factory, Smart City, and IoT development.

## Simple Overview

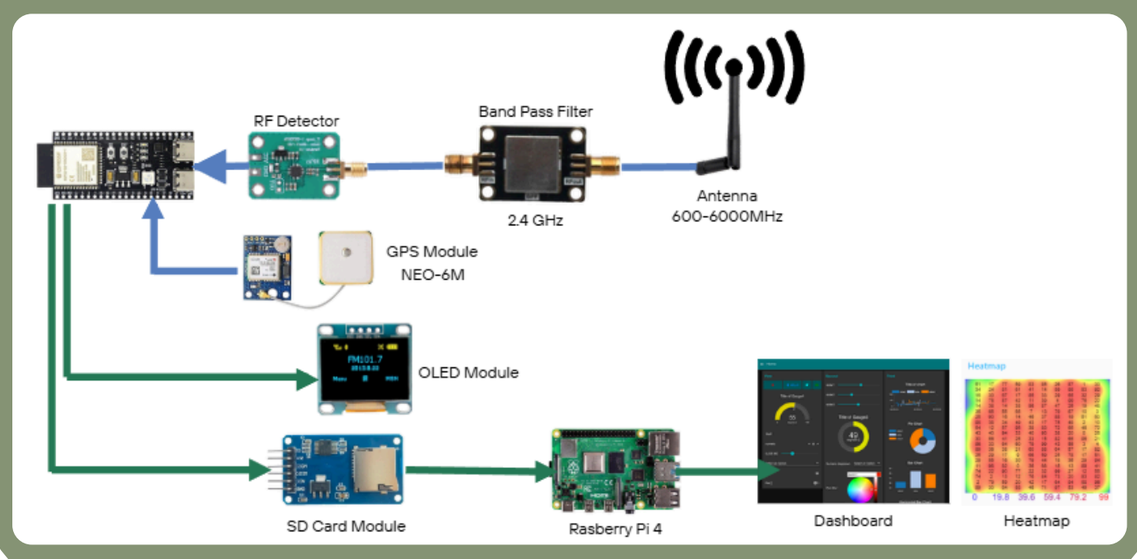


## Result

A prototype system for measuring and heatmapping of high-frequency radio waves successfully measures 2.4 GHz RF signals and visualizes the intensity distribution as a heatmap on a real map.

## Method

1. Prepare equipment
2. Prototype assembly
3. Testing and data processing
4. Creating a heat map

## Conclusion

The system measures 2.4 GHz RF intensity and displays it as a heatmap, allowing for clear visualization of the intensity distribution.
Future improvements may include the AD8317 Library, multi-band measurement, cloud-based data storage, and data analysis.

## Reference

[1] Analog Devices, Inc., “AD8317: 1 MHz–10 GHz Demodulating Log Amplifier—Datasheet,” 2019.

[2] IEEE 802.15 Working Group, “IEEE 802.15.4—2.4 GHz channels (11–26) and PHY details.”

## Project Devoloper

Ploynumthong Chaiyotha 67050369
Rathiphat Buakaew 67050465